Product Specifications:

Lamp Type: PHILIPS LUMI LED's
Driver: MeanWell
Operating Temp.: -20°C ~ +50°C
Material: Die cast aluminium body+Zinc Galvanized Steel Bracket
Finish: Black
Lifespan: 30,000 Hrs
Warranty: 3 Years
Applications: Outdoor Parking Lots, Playgrounds, Landscape Lighting

Product Options:

Wattage: 50W/75W/100W/150W/300W/400W/500W
CCT: 3000K - 6000K
Beam Angle: 60x60° / 100x100° / 140x140°
Control: Switchable / 1-10V / DALI
Control: Occupancy Sensor

	SKU	W	CCT	LM	mA	Beam	Size(mm)	Cut(mm)
Spartan	15646	200W	5000K	26,000lm	3125mA	60x60°	310x124x239	-
	15709	600W	5000K	78,000lm	12500mA	60x60°	582x124x359	-
	15726	1000W	5000K	120,000lm	16800mA	30°x30°	681x113x463	-

AC220-240V IP 65 30x30°|60x60° CRI>80 PF>0.9

SDCM <5 Class I IK09 CE

200W

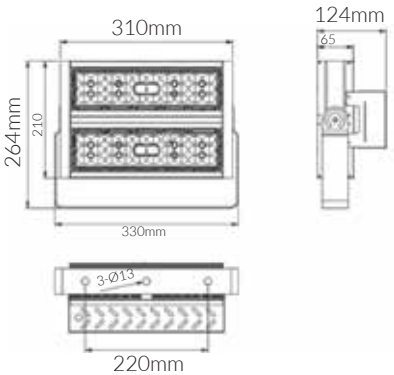

600W

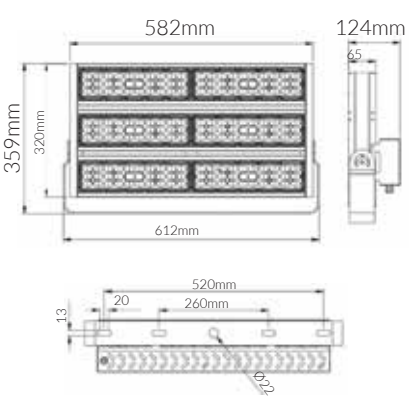
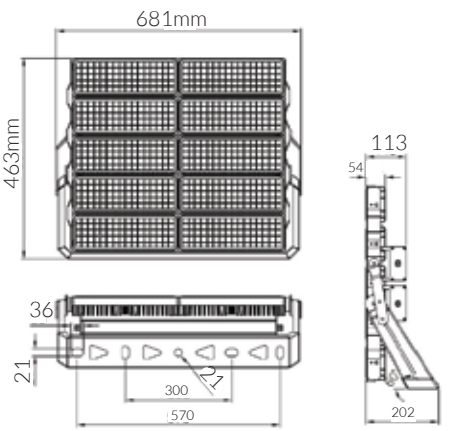
1000W