Zozo
Recessed Downlight

Features

- IP65 Protection with super anti-glare Design, Triple anti-dazzle Design,Multiple Reflectors Optics optional
- Four size options 3"4"5"6"7"
- Wide mounting ring (10mm to 11mm)
- 100~140mm pre-wire

Recessed

UGR <17

IP Rating
IP65

6 years warranty **Standard Warranty**

SYV Iluminacion Europea, Sociedad Limitada
Avda San Pablo 28 - 28820,
Cosloda (Madrid) Spain

© 2022 SYV

Zozo

TECHNICAL DATA SHEET - ZOZO - 18224 - RECESSED DOWNLIGHT

TECHNICAL DATA

Product Data	Recessed Downlight
Lamp Type	BRIDGELUX LED
Driver	TRIDONIC
Wattage	35W
Color Temperature	6000K
Rated Luminaire Luminous Flux	3,150lm
Rated Luminaire Efficiency	90lm/W
IP Rating	65
Beam Angle	55°
Voltage	AC220-240V
Frequency Range	50-60 Hz
CRI	Ra>80
Power Factor	>0.9
Safety Class	Class II
Output Current	850mA
THD	<20%
Operating Temperature	-20°C ~ +50°C
Storage Temperature	-30°C ~ +80°C
Material	Die Cast Aluminum
Finish	White Trim, Shining Silver Reflector
Life Span	60,000 Hours
Warranty	6 Years
Applications	Residential, Commercial, Hospitality etc.

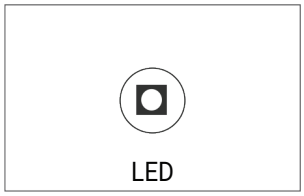

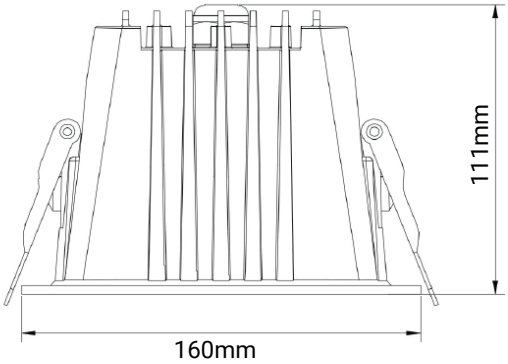

Cutout: 150mm

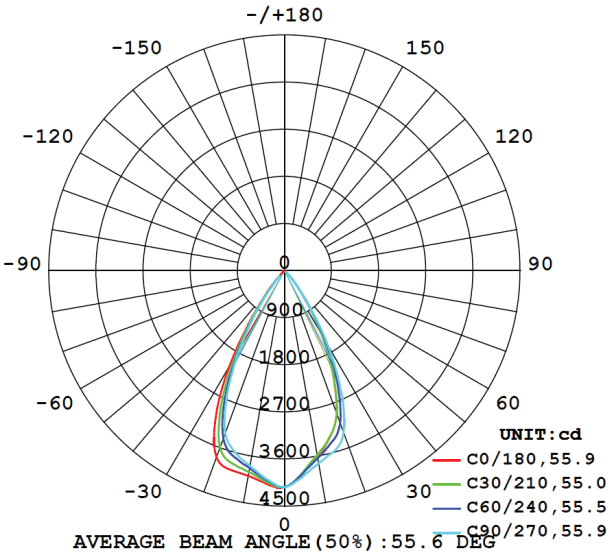

TECHNICAL OPTIONS

Wattage	10W/12W/15W/20W/25W/30W/40W
Color Temperature	3000K-6000K
Beam Angle	24°
Control	Switchable/TRIAC/0-10V/DALI

SYV Iluminacion Europea, Sociedad Limitada
Avda San Pablo 28 - Naves 15 y 2 - 28820
Cosloda (Madrid) Spain
SYV Design is constantly developing and improving it's products. The right is reserved to change specification without prior notification or public announcement.